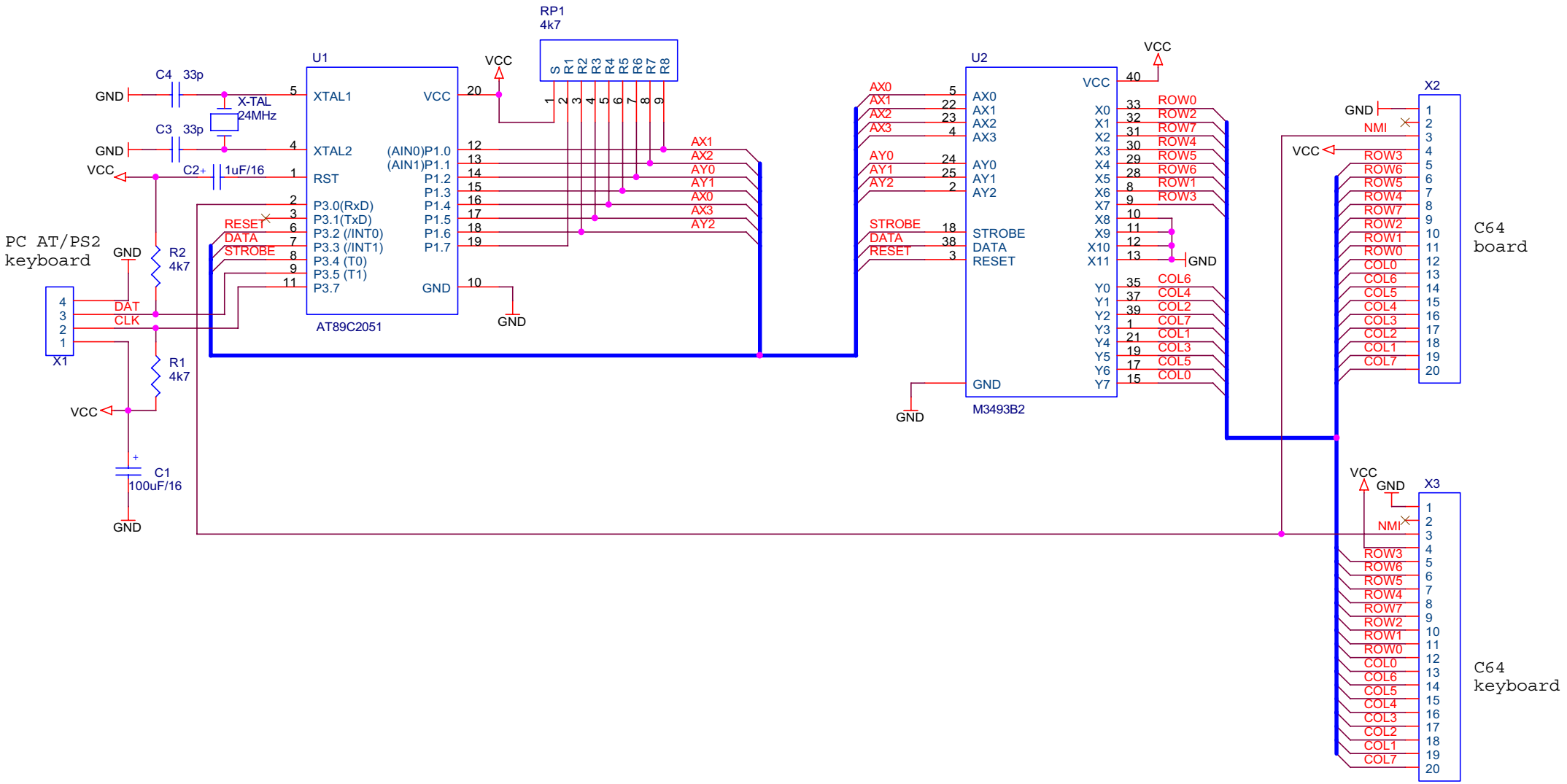

Title	**C64 PC keyboard V1.0**	
Size A4	Document Number PCkeyb	Rev 1
Date: Thursday, November 23, 2000	Sheet 1 of 1	